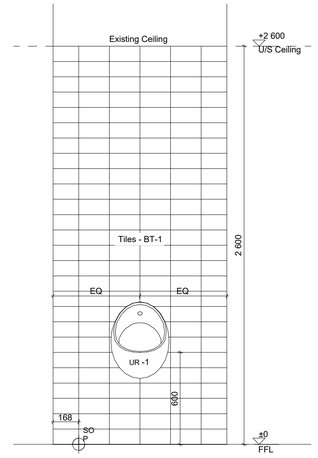


E1 Typical Elevation 1 1:20

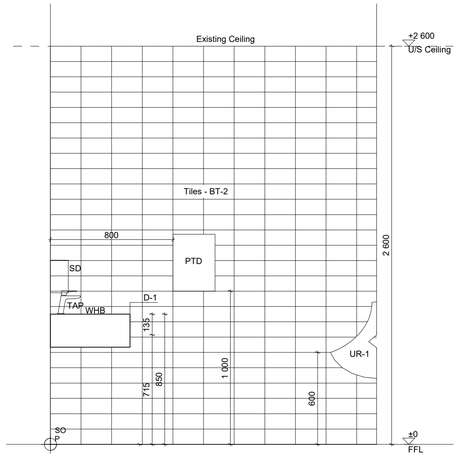


E2 Typical Elevation 2 1:20

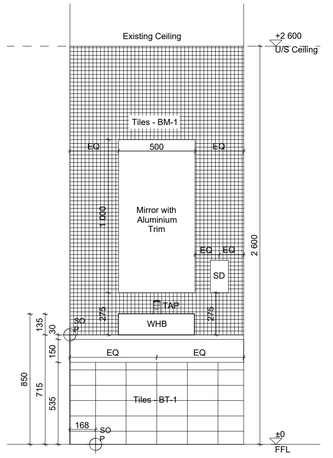


E3 Typical Elevation 3 1:20

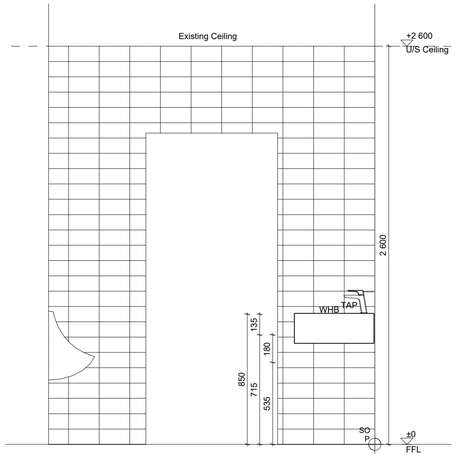


E4 Typical Elevation 4 1:20

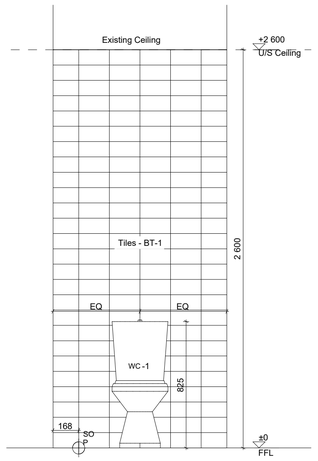


E5 Typical Elevation 5 1:20

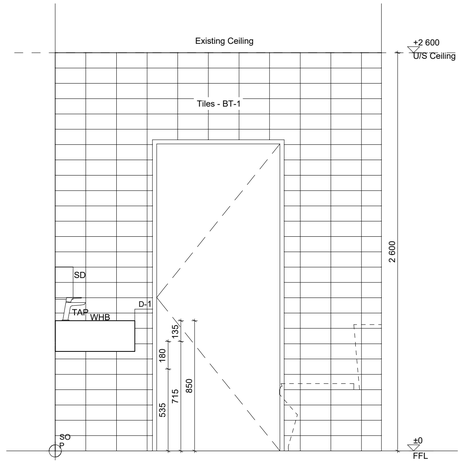


E6 Typical Elevation 6 1:20

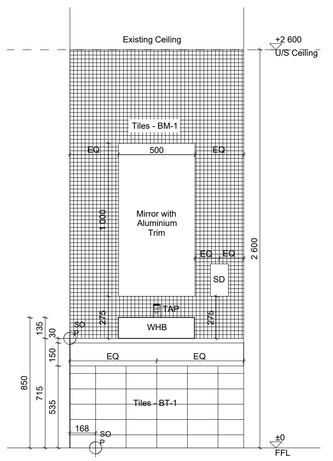


E3 Typical Elevation 3 1:20

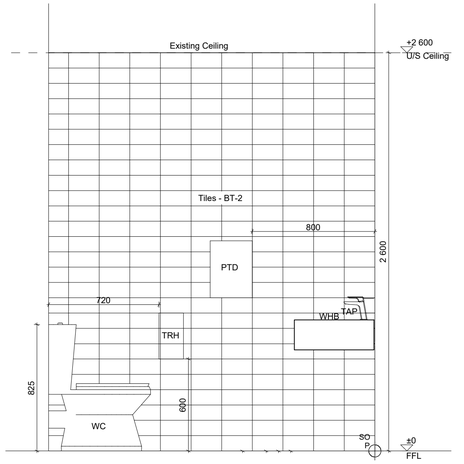


E8 Typical Elevation 8 1:20

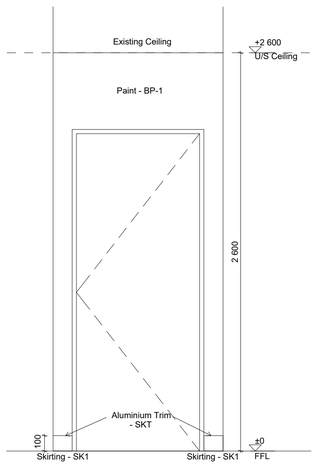


E9 Typical Elevation 9 1:20

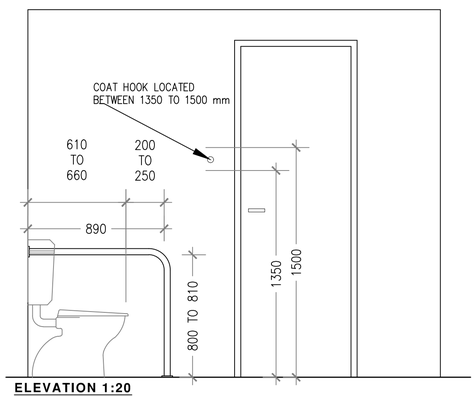


**ELEVATION 1:20**

**UNISEX PARAPLEGIC TOILET - B**

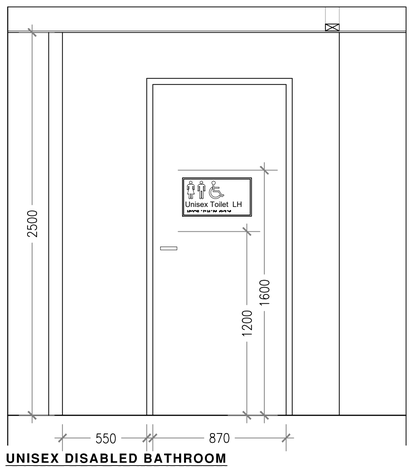


**UNISEX DISABLED BATHROOM**
**DETAIL DOOR ELEVATION 1:20**

1 Bathroom Elevations

SCALE: AS PER PLAN

# ISSUED FOR INFORMATION

| Rev | Date | Description |
|---|---|---|
| 00 | 2026/06/27 | TENDER ONLY - NOT FOR CONSTRUCTION |

Important Notes:

1. All engineering services to be design. specified and finalized by specialist competent professional.
2. Engeneering services on this drawing are Design Intent only and need to be coordinated.
3. All engineering services shown are not for construction.

Notes:

1. Copyright and right of reproduction of this drawing or and portion thereof is reserved by Afroteq Advisory.
2. Contractors to verify all levels, heights and dimensions on site prior to manufacture or installation, and to check same against the drawings.
3. Quality of all materials and workmanship to comply with the relevant SABS and BSS specifications.
4. The contractor is responsible for correct setting out of the specified works.
5. Contractors are to ensure that all details shown on this drawing are in complete compliance with local authority by-laws and SABS regulations.
6. Contractors are to locate and identify existing services on site, and are to protect these from damage throughout the duraton of works.
7. Contractors shall be responsible for ensuring the structural stability of all components of their work and ascertain that the main structure is capable of supporting all loads applied thereto.
8. Contractors are to ensure that their work, on site, is adequately protected at all times, both during construction and after installation, and the responsibility for any damages incurred lies with the contractor until final hand over of the site.
9. Contractors are to ensure that all components, glazing panels and shopfitted items fit through all doorways, stairwells and lifts.
10. This drawing is not to be scaled. Figured dimensions are to be used at all times.
11. All dimensions must be checked on site prior to commencement of work.
12. Any queries, variations, errors, discrepancies or omissions arising from any of the above, must be reported to Afroteq Advisory for clarification, prior to the commencement of any works.
13. Where specific products or finishes are named, similar or alternative specifications will be considered subj ect to matching to original products proven performance specifications and to be approved by Interior Designer / Architect and subject to approved samples being made available prior to manufacture.
14. All specialized finishes are to be manufactured and install ed by an approved supplier / installer as listed by the original material manufacturer.
15. The original material manufacturer will inspect that all materials are manufactured to their required specifications. Product branding will be requested where necessary and locati on of product badge(s) is to be approved by Interior Designer / Architect prior to positioning of badge(s).
16. Mock ups and samples will be required. inclusive of visits by Interior Designer / Architect / materialmanufacturer during the manufacturing process and prior to site installation.
17. Should the materials not confirm to material manufacturer's specifications and recommended procedures, Interior Designer / Architect has the right to reject the said item at no cost to the project, Client and/or Interior Desi gner /Architect. Approvals and inspection processes wi ll be agreed prior to manufacture and wi continue until such time as final sign-off is given in writing by the Interior Designer / Architect / material manufacturer.
18. All timber products on this project are to be Forest Stewardship Council (FSC) certified and carry the FSC trademark.
19. All materials are to be procured timeously to ensure that dye lot / colour variations do not occur. Any dye lot / colour variations wi ll be rejected by the Interior Desi gner / Architect and this also applies to attic stock orders.
20. All documentation relating to warranties and guarantees including maintenance guidelines are to be issued in writing by suppliers / manufacturers to the Interior Designer / Architect.
21. All products / finishes are to be installed accordi ng to the original material manufacturer's recommendations and procedures.
22. Refer to Interior Designer's FFFE schedules for further clarification regarding paint, adhesives and sealants requirements in accordance with the Green Building Council of South Africa.

client

SANEDI
152 ANN CRESENT, STRATHAVON, SANDTON, 2146

ELITE FACILITIES MANAGEMENT

cad file name
(RD.TS.011)

page type
A1

discipline
SPACE PLANNING

project
SANEDI REFURBISHMENT

drawing title
Bathroom Elevations

drawn RD

checked

dwg. approval

client approval

date 2026/06/27

scale AS PER SHEET

Drawing number
(RD.TS.011)

Revision
RD00